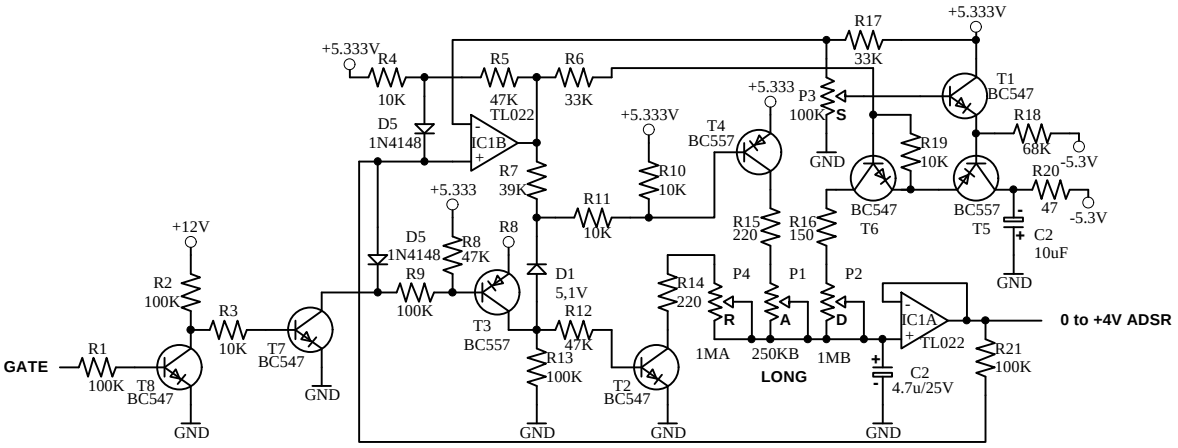

This is the ADSR envelope generator from Roland MC202.
Orginal trasistors are: 2SA733 (PNP) 2SC945 (NPN).
any standard NPN, PNP like BC557,547 will do.

Orginal OP amp is TL022, a not so usuall kind of OP.
Any odniary OP amp will do like :LF353,TL072,LM358,CA3260 etc.
If you koncider the output voltage swing of the OP amp used.

Roland used a + voltage of 5.333v, this is a reference voltage for the
CEM3340 vco therefore the strange voltage .
You may use any other voltage desired if rescaling of some resistors
are taken in precautions.

This envelopegenerator is also used in the SH101 from Roland.
The changes in the SH101 is the usage of +5v and GND for the OP amp (IR9022).

The times are exponentiall.And the performance is good!

Reg
BJ